INTERIOR

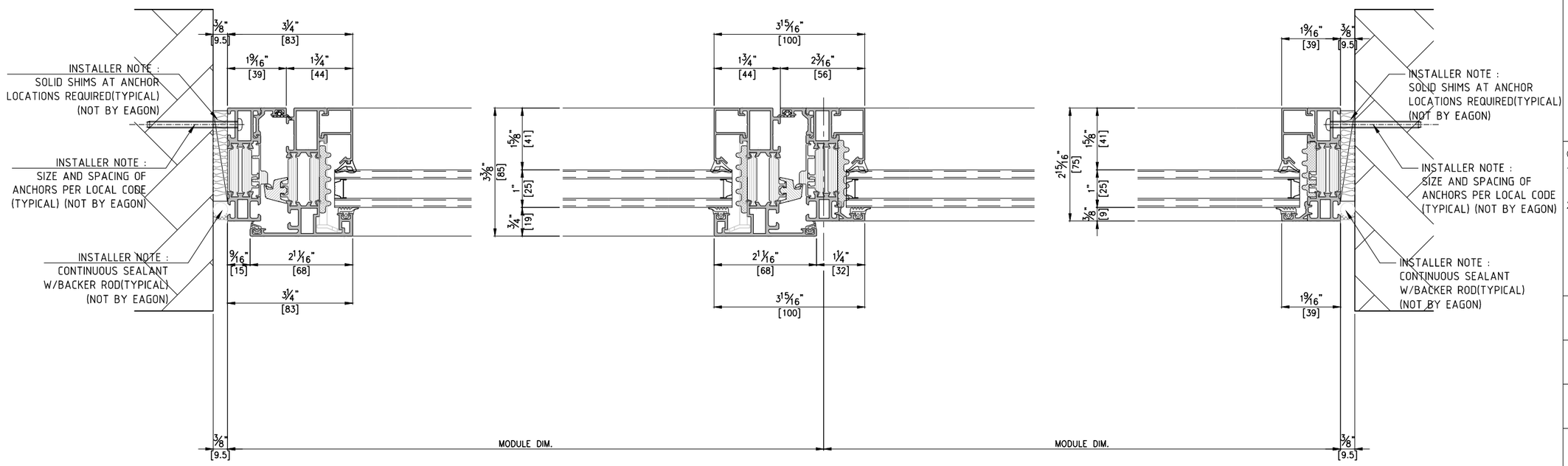

EXTERIOR

HORIZONTAL SECTION DETAIL

1

SCALE : 1/3

EAGON

WINDOWS & DOORS CO.LTD

NOTE

INSTALLATION
(WOOD+SCREW)
HORIZONTAL

General Notes

1. Elevations are shown from exterior unless otherwise noted
2. Anchor/wall fastener – Location, spacing and quantity to be determined per design pressure requirements by structural engineer and/or certified test drawings

REV.	DESCRIPTION		
0	2021. 00. 00.		
	v2		

PROJECT
–

ITEM NO.
–

PRODUCT NAME
EWS75 OW

QTY
1

VIEW
EXTERIOR

S C A L E
–

DRAWING NO.

ISSUE