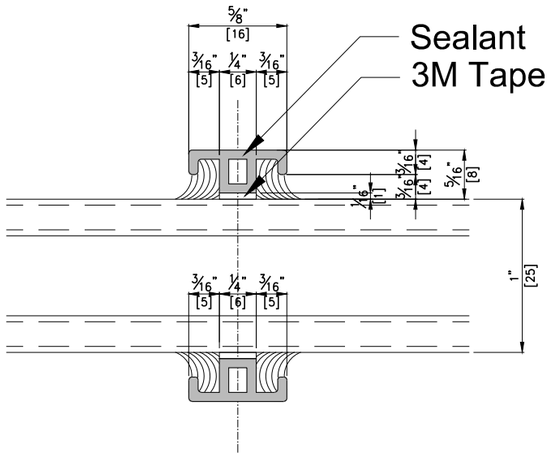

1 5/8" (16mm) SDL
SCALE : 1/9

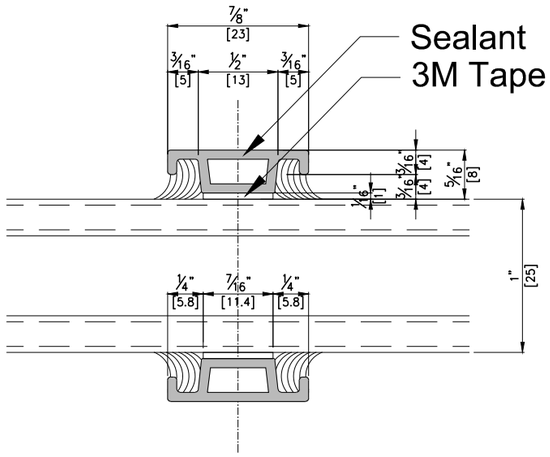

1 7/8"(23mm) SDL
SCALE : 1/9

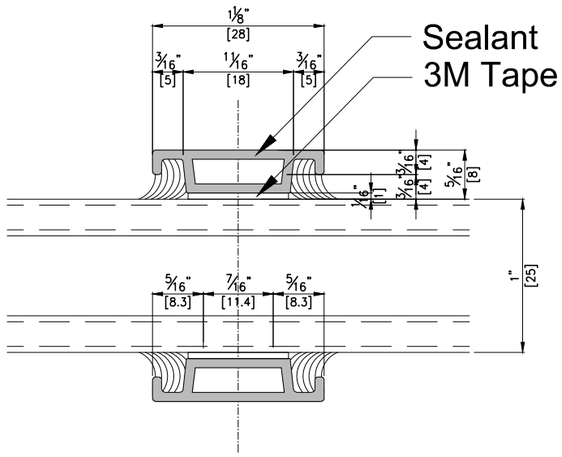

1 1 1/8"(28mm) SDL
SCALE : 1/9

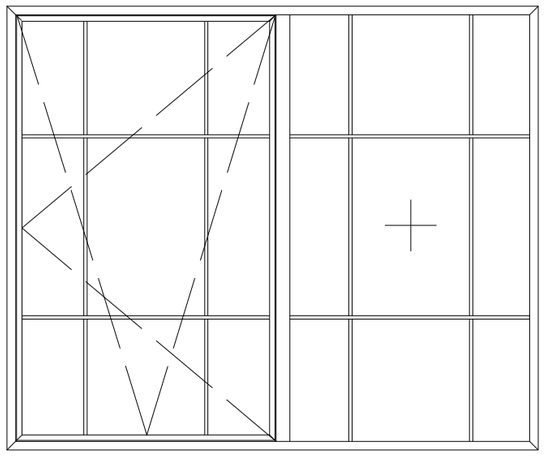

1 5/8" (16mm) SDL
SCALE : 1/30

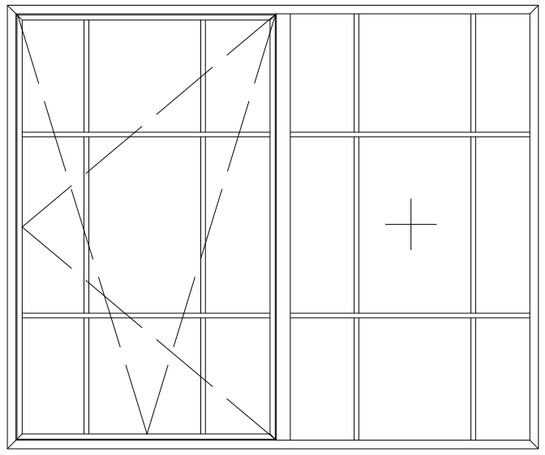

1 7/8"(23mm) SDL
SCALE : 1/30

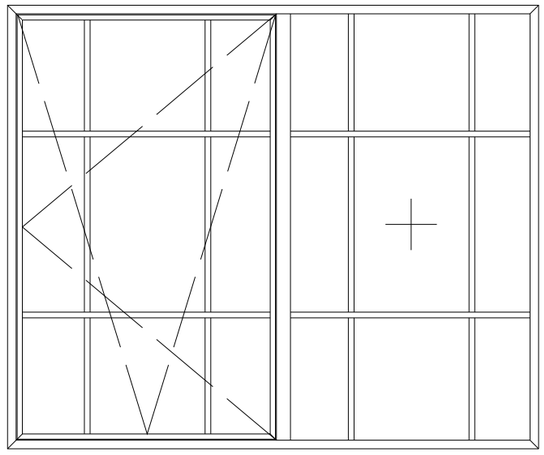

1 1 1/8"(28mm) SDL
SCALE : 1/30

NOTE
- Available on all products.

EAGON
WINDOWS & DOORS CO.LTD

NOTE
WINDOW

General Notes
1. Elevations are shown from exterior unless otherwise noted
2. Anchor/wall fastener
   - Location, spacing and quantity to be determined per design pressure requirements by structural engineer and/or certified test drawings

REV.	DESCRIPTION		
0	2021. 00. 00.		
	v2		

PROJECT
-

ITEM NO.
-

PRODUCT NAME
SDL OPTIONS

QTY
1

VIEW
EXTERIOR

SCALE
-

DRAWING NO.

ISSUE